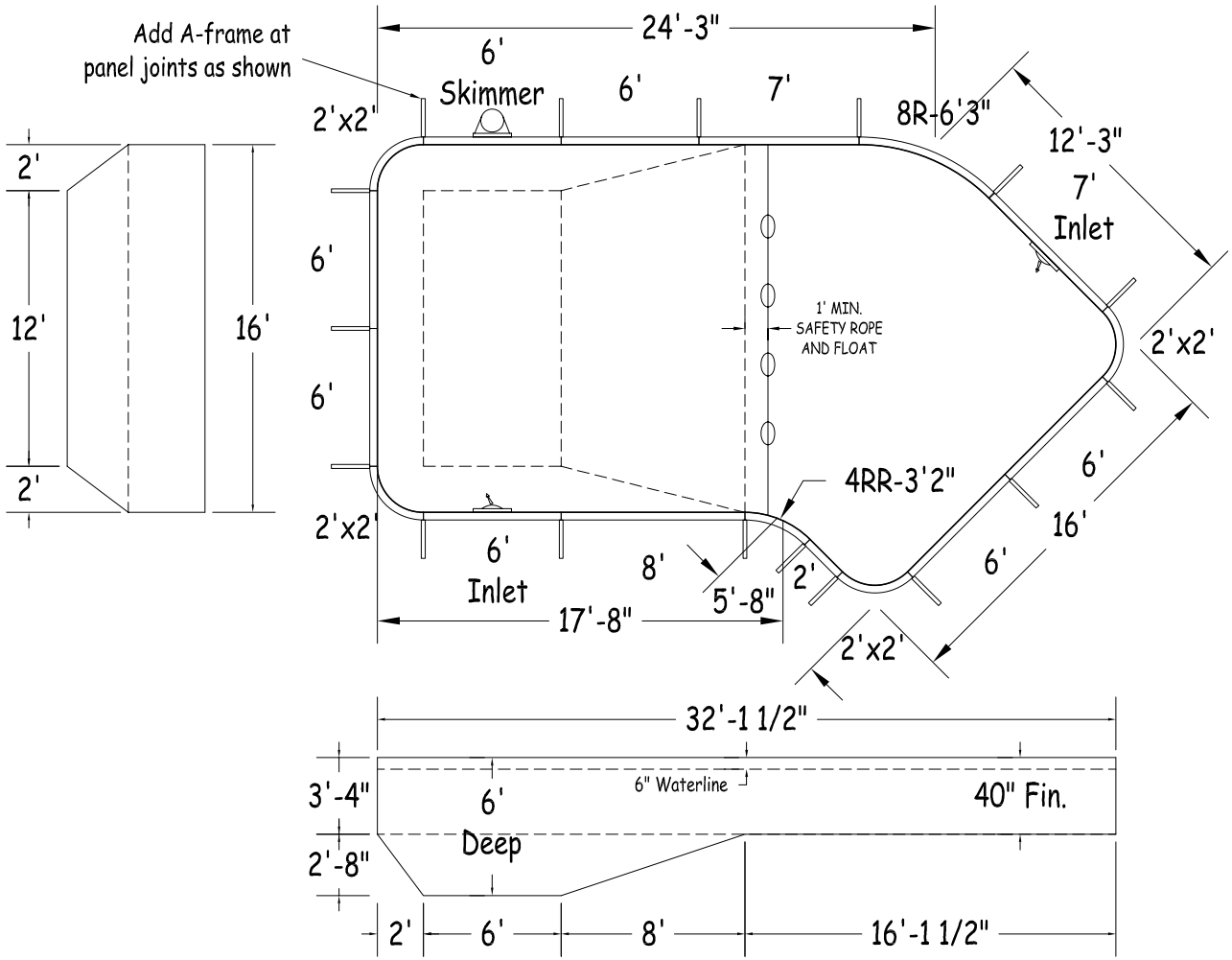

Steps Position

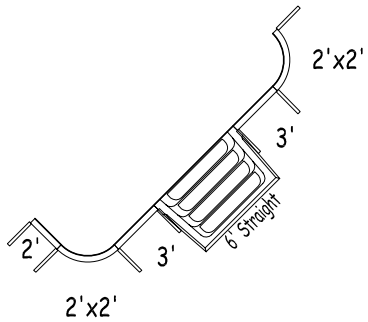

6' Step Option

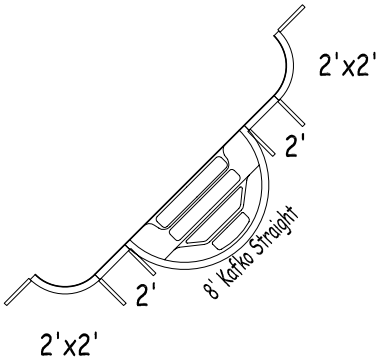

8' Step Option

KAFKO POOL PRODUCTS

Steel

Bahama Lazy-L 16' x 32' Left

DWG #: KAL2S42-1632-6'H_07L	AREA (SqFt): 475	PERIMETER: 87'-11"	
VOLUME (US Gal): 13 300	LINER AREA (SqFt): 480	DATE: 1/01/2007	
VOLUME (Litres): 50 400	SAFETY COVER (SqFt): 575	SCALE: 1/8" = 1'	

Feet First™

NON-DIVING POOL

USE OF DIVING EQUIPMENT IS PROHIBITED

MEETS DEPTH AND SHAPE MINIMUM STANDARD ANSI/NSPI5-2003

Bahama Lazy-L

SHEET: 1 OF 2

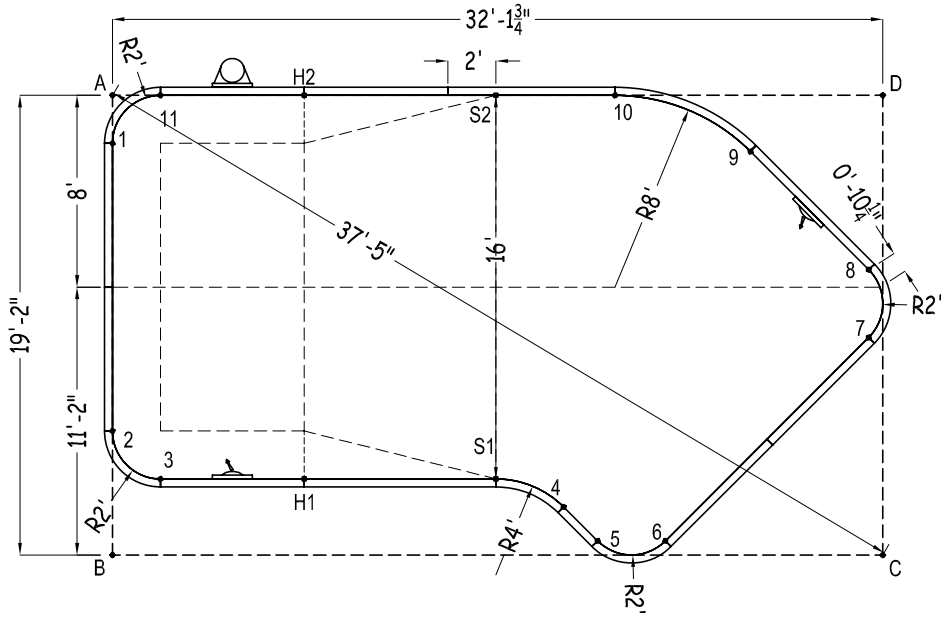

2007

Part number	Description	Qty (No Step)	Qty (6' Step)	Qty (8' Step)
02-SP08	8' Plain	1	1	1
02-SP07	7' Plain	1	1	1
02-SI07	7' Inlet	1	1	1
02-SP06	6' Plain	5	3	3
02-SS06	6' Skimmer	1	1	1
02-SI06	6' Inlet	1	1	1
02-SP03	3' Plain	-	2	-
02-SP02	2' Plain	1	1	3
02-CP06G-08	8R-6'3"	1	1	1
02-RP03E-04	4RR-3'2"	1	1	1
02-CB	2'x2'	4	4	4
	6' Straight Step	-	1	-
	8' Kafko Straight Step	-	-	1
A-Frame	A-Frame Multiplier	17	18	18
15-0632-9	Optional Deck Supports	41	38	38

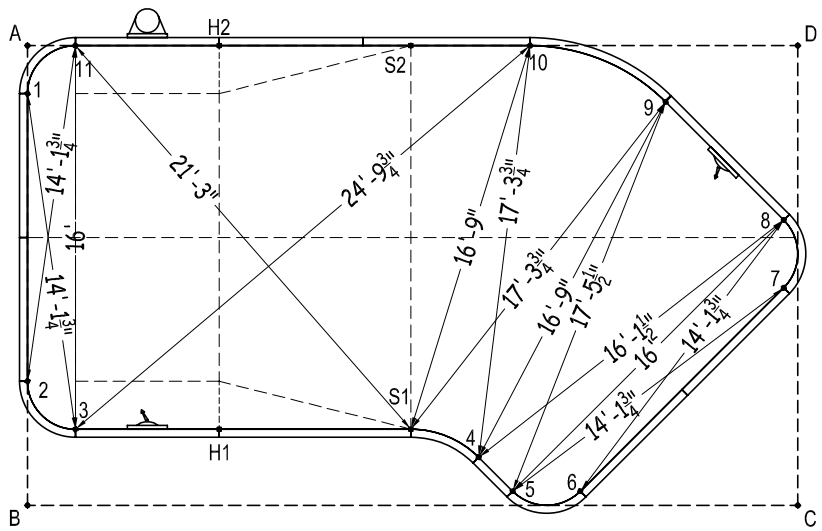

	A	B	C	D
1	2'	17'-2"	36'-5 1/4"	32'-2 1/2"
2	14'	5'-2"	32'-6 3/4"	35'-0 3/4"
3	16'-1 1/2"	3'-9"	30'-3 3/4"	34'-1 1/2"
4	25'-5 3/4"	18'-11 1/4"	13'-5 1/2"	21'-8 3/4"
5	27'-5 3/4"	20'-3"	11'-11"	22'-0 3/4"
6	29'-7 1/2"	23'-1"	9'-1"	20'-8 1/4"
7	33'-1 1/2"	32'-10"	9'-1"	10'-1 1/2"
8	32'-4 1/2"	33'-8 3/4"	11'-11"	7'-3 1/2"
9	26'-8 3/4"	31'-6"	17'-8 1/2"	6'
10	20'-11 3/4"	28'-5"	22'-2 1/4"	11'-2"
11	2'	19'-3 1/4"	35'-8 3/4"	30'-1 3/4"
H1	17'-10 3/4"	8'-7 1/4"	24'-4 1/4"	28'-11 1/2"
H2	8'	20'-9 1/4"	30'-10"	24'-1 3/4"
S1	22'-7 1/2"	16'-3 3/4"	16'-5 1/2"	22'-8 3/4"
S2	16'	24'-11 3/4"	25'-0 3/4"	16'-1 3/4"
A	-	19'-2"	37'-5"	32'-1 3/4"

Bahama Lazy-L 16' x 32' Left | DWG #: KAL2S42-1632-6'H_07L | DATE: 1/01/2007 | SHEET: 2 OF 2